SFP-H10GB-ACU6M-C

Cisco Compatible TAA Compliant 10GBase-CU SFP+ Direct Attach Cable (Active Twinax, 6m)

Features:

- Up to 10Gbps bi-directional data links
- Dual SFP Connectors
- Industry Standard small form pluggable
- Hot Pluggable
- Single Power Supply 3.3V
- Operating Temperature: 0 to 70 Celsius
- RoHS Compliant and Lead-Free

Applications:

- 10G Ethernet
- 10G Fibre Channel

Product Description

This is a Cisco® Compatible 10GBase-CU SFP+ to SFP+ direct attach cable that operates over active copper with a maximum reach of 6m. It has been programmed, uniquely serialized, and data-traffic and application tested to ensure it is 100% compliant and functional. We stand behind the quality of our products and proudly offer a limited lifetime warranty. This cable is TAA (Trade Agreements Act) compliant and is built to comply with MSA (Multi-Source Agreement) standards.

ProLabs' transceivers are RoHS compliant and lead-free.

TAA refers to the Trade Agreements Act (19 U.S.C. & 2501-2581), which is intended to foster fair and open international trade. TAA requires that the U.S. Government may acquire only "U.S. – made or designated country end products."

Rev. 041024

General Specifications

Parameter	Symbol	Min	Typ.	Max.	Unit	Notes
Data Rate	DR		10.3125		Gbps	1
Bit Error Rate	BER			10^{-12}		
Operating Case Temperature	Tc	0		70	°C	2
Storage Temperature	Tstg	-40		85	°C	3
Input Voltage	Vcc	3.14	3.3	3.46	V	4
Supply Current	Icc		100	300	mA	4
Cable Impedance	Z	90	100	110	Ω	
Product Weight	GD		72		g/PCS	
Cable Weight	GC		26		G/M	
Dust Cap Weight	GS		0.80		g/PCS	
Wire Gauge			30		AWG	
Tolerance Range			6		±cm	

Notes:

1. IEEE 802.3ae compatible.
2. Case temperature.
3. Ambient temperature.
4. For electrical power interface.

Pin Descriptions

Pin	Symbol	Name/Description	Notes
1	VeeT	Transmitter ground. Common with receiver ground.	1
2	Tx_Fault	Transmitter Fault.	
3	Tx_Disable	Transmitter Disable. Laser output disabled on “high” or “open.”	2
4	SDA	Data line for Serial ID.	3
5	SCL	Clock line for Serial ID.	3
6	MOD_ABS	Module absent. Grounded within the module.	3
7	RS0	No connection required.	
8	LOS	Loss of Signal. Logic 0 indicated normal operation.	4
9	RS1	No connection required.	
10	VeeR	Receiver ground. Common with transmitter ground.	1
11	VeeR	Receiver ground. Common with transmitter ground.	1
12	RD-	Receiver Inverted DATA out. AC coupled.	
13	RD+	Receiver Non0inverted DATA out. AC coupled.	
14	VeeR	Receiver ground. Common with transmitter ground.	1
15	VccR	Receiver power supply.	
16	VccT	Transmitter power supply.	
17	VeeT	Transmitter ground. Common with receiver ground.	1
18	TD+	Transmitter Non-Inverted DATA in. AC coupled.	
19	TD-	Transmitter Inverted DATA in. AC coupled.	
20	VeeT	Transmitter ground. Common with receiver ground.	1

Notes:

1. Circuit ground is isolated from chassis ground.
2. Disabled: Tdis>2V or open, Enabled Tdis<0.8V.
3. Should be pulled up with 4.7kΩ-10kΩ on host board to a voltage between 2V and 3.6V.
4. LOS is open collector output.

Electrical Pad Layout

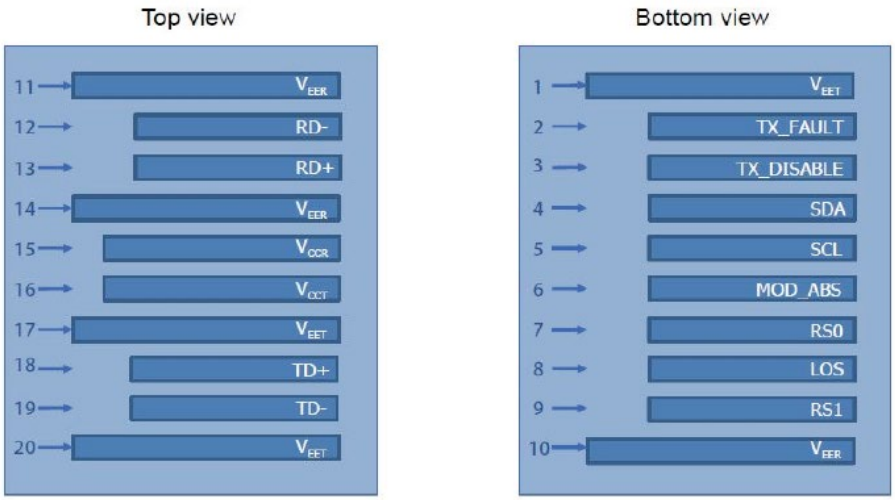

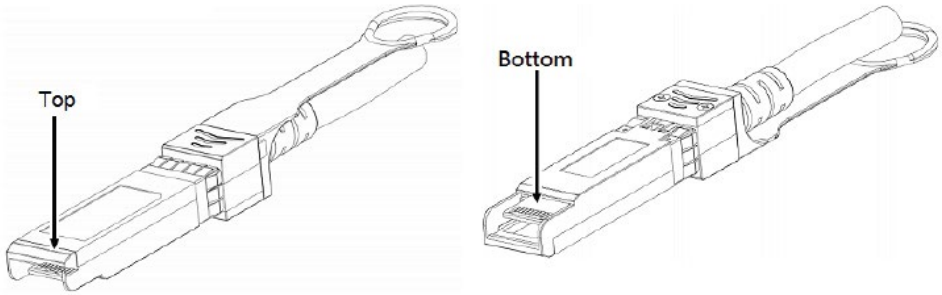

Block Diagram

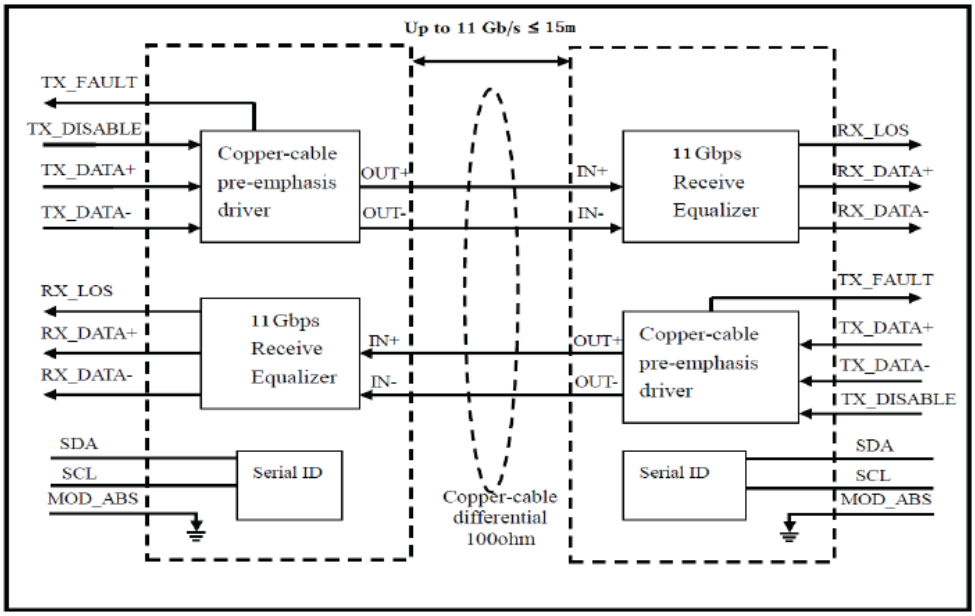

Mechanical Specifications

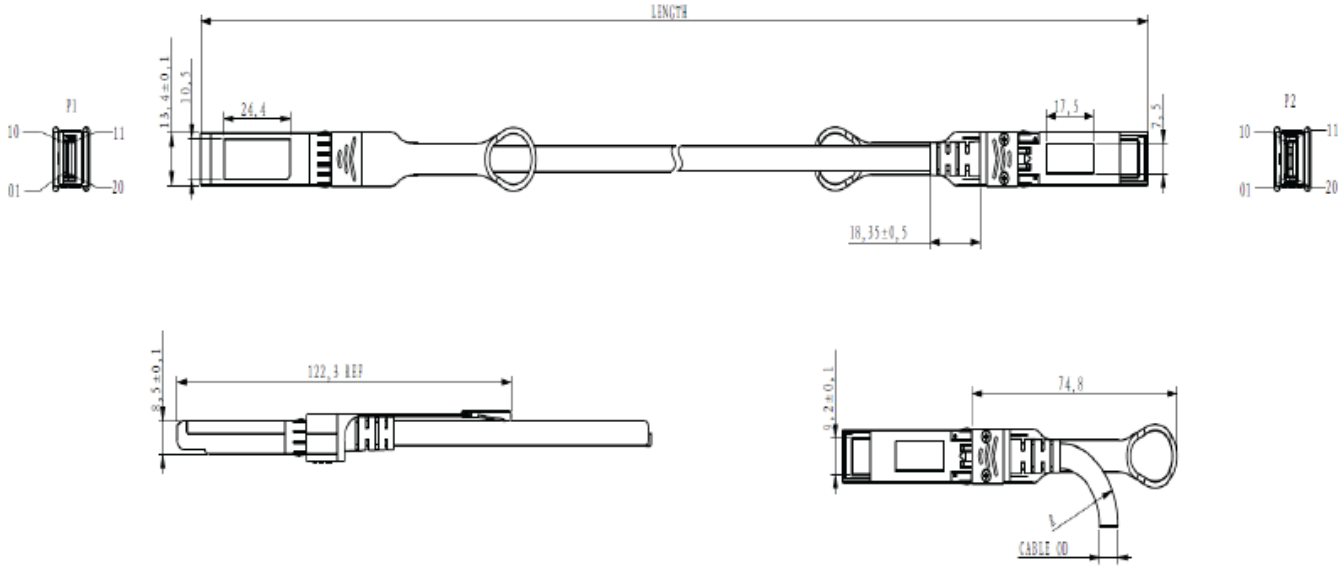

About ProLabs

Our experience comes as standard; for over 15 years ProLabs has delivered optical connectivity solutions that give our customers freedom and choice through our ability to provide seamless interoperability. At the heart of our company is the ability to provide state-of-the-art optical transport and connectivity solutions that are compatible with over 90 optical switching and transport platforms.

Complete Portfolio of Network Solutions

ProLabs is focused on innovations in optical transport and connectivity. The combination of our knowledge of optics and networking equipment enables ProLabs to be your single source for optical transport and connectivity solutions from 100Mb to 400G while providing innovative solutions that increase network efficiency. We provide the optical connectivity expertise that is compatible with and enhances your switching and transport equipment.

Trusted Partner

Customer service is our number one value. ProLabs has invested in people, labs and manufacturing capacity to ensure that you get immediate answers to your questions and compatible product when needed. With Engineering and Manufacturing offices in the U.K. and U.S. augmented by field offices throughout the U.S., U.K. and Asia, ProLabs is able to be our customers best advocate 24 hours a day.

Contact Information

ProLabs US

Email: sales@prolabs.com
Telephone: 952-852-0252

ProLabs UK

Email: salessupport@prolabs.com
Telephone: +44 1285 719 600